JFA CONNECTOR J1000 SERIES

2.2mm pitch/Disconnectable Crimp style connectors(Wire-to-board/Wire-to-wire)

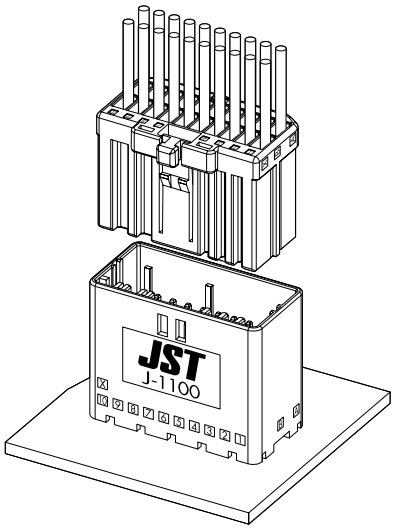

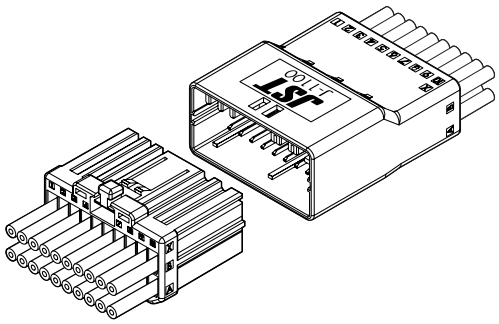

It is a high reliability connector corresponding to demand of the miniaturization of electronic equipment and the wire size of AWG#18.

- ***Double-spring construction***
- ***Housing lance***
- ***Clear "click feeling"***

Specifications

•Current rating: Refer to the following matrix table.
•Voltage rating: 125V AC, DC
•Temperature range: -55°C to +105°C
(including temperature rise in applying electrical current)
•Applicable wire: AWG #28 to #18 (0.08 to 0.82mm^2)
(Tin-plated annealed copper wire [stranded wire])
(Insulation O.D./0.85 to 2.1mm)
•Applicable PC board thickness: 1.6mm

*Contact JST for details.
*Compliant with RoHS.

Current rating Unit: A

Circuits	Wire size (AWG)					
	#18	#20	#22	#24	#26	#28
1 (Note)	6.8	5.9	5.0	4.2	3.2	2.5
3	6.2	5.2	4.6	3.6	3.1	2.5
6	5.5	4.6	4.0	3.0	2.5	2.1
8	5.5	4.6	4.0	3.0	2.4	2.0
12	4.7	3.9	3.4	2.6	2.1	1.7
20	3.9	3.3	2.9	2.2	1.8	1.6

Note: Current rating value when applying only to 1-circuit of 3-circuit connector.

Receptacle contact

Tin-plated

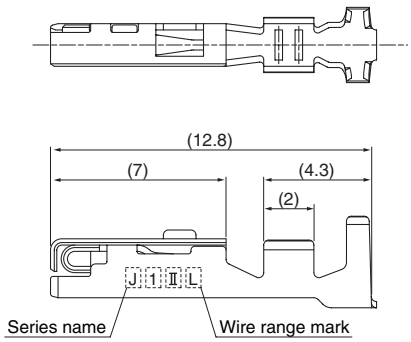

Gold-plated

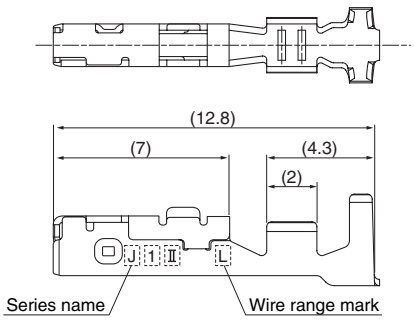

Strip contact Model No.	Applicable wire			Insulation O.D. (mm)	Q'ty / reel
	Nominal	mm²	AWG#		
SF1F-002 (*) -P0.6	M	0.08～0.22	28～24	0.85～1.43	—
SF1F-21 (*) -P0.6	L	0.30～0.82	22～18	1.60～2.10	5,000

Material and Finish
Copper alloy, tin-plated, gold-plated

RoHS compliance
Note: Finish(*):T .....Tin-plated
GC ...Gold-plated

Tab contact

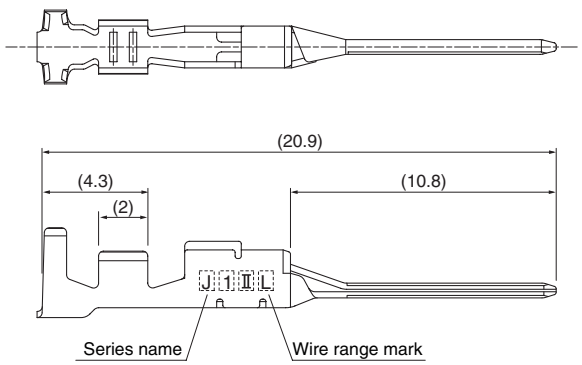

Strip contact Model No.	Applicable wire			Insulation O.D. (mm)	Q'ty / reel
	Nominal	mm²	AWG#		
SF1M-002 (*) -M0.6A	M	0.08～0.22	28～24	0.85～1.43	—
SF1M-21 (*) -M0.6A	L	0.30～0.82	22～18	1.60～2.10	5,000

Material and Finish
Copper alloy, tin-plated, gold-plated

RoHS compliance
Note: Finish(*):T .....Tin-plated
GC ...Gold-plated

Crimping machine, Applicator

Strip contact Model No.	Crimping machine	Crimp applicator	Dies	Crimp applicator with dies	Hand crimp tools
SF1F-002 (*) -P0.6	AP-K2N	MKS-L	MK/SF1F/M-002-06	APLMK SF1F/M002-06	Refer to page 15, 16.
SF1M-002 (*) -M0.6A		—	—	—	
SF1F-21 (*) -P0.6	AP-K2N	MKS-L	MK/SF1F/M-21-06	APLMK SF1F/M21-06	Refer to page 15, 16.
SF1M-21 (*) -M0.6A		—	—	—	

- *Extraction tool for J1000 series: EJ-JFAJ1100*
- *Hand crimp tool uses the YRK series and refer to page 15, 16 of YRK series hand crimping tools for details.*

Note 1. Contact JST for fully automatic crimping applicator.
2. Finish(*):T .....Tin-plated
GC ...Gold-plated

Receptacle housing

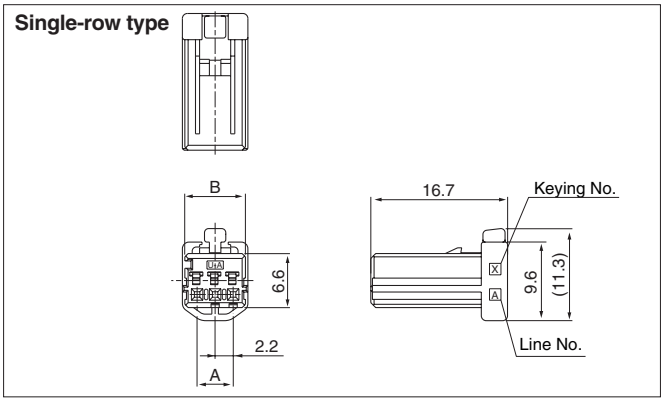

Circuits	Keying	Model No.	Dimensions (mm)		Q'ty / box
			A	B	
3	X	**J11SF-03V-KX**	4.4	7.4	1,200
	Y	**J11SF-03V-KY**	4.4	7.4	1,200

Material
Glass-filled PBT, UL94V-0, black

RoHS compliance

Tab housing

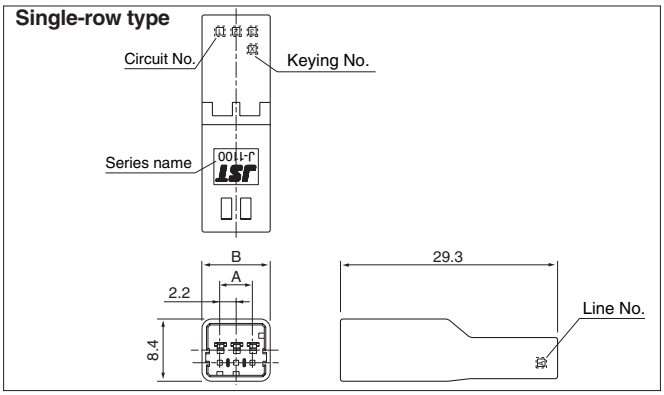

Circuits	Keying	Model No.	Dimensions (mm)		Q'ty / box
			A	B	
3	X	**J11SFM-03V-KX**	4.4	9.2	500
	Y	**J11SFM-03V-KY**	4.4	9.2	500

Material
Glass-filled PBT, UL94V-0, black

RoHS compliance

Header Top entry type (Center locking type)

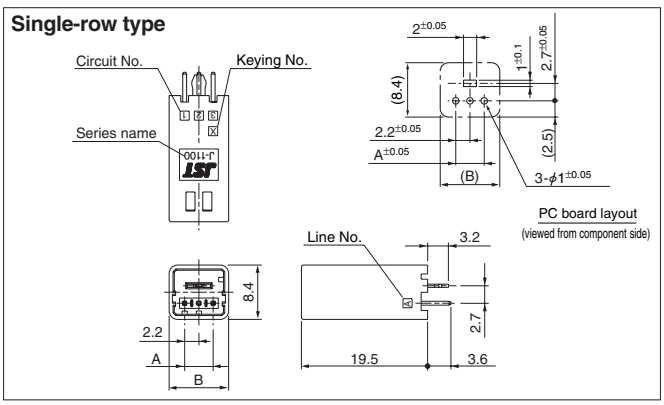

Circuits	Keying	Model No.	Dimensions (mm)		Q'ty / box
			A	B	
3	X	**B03B-J11SK-(*)XR**	4.4	9.2	625
	Y	**B03B-J11SK-(*)YR**	4.4	9.2	625

Material and Finish
Post: Copper alloy, tin-plated, gold-plated Housing: Glass-filled PBT, UL94V-0, black Reinforcing metal fixture: Copper alloy, tin-plated

RoHS compliance *Gold-plated product displays (LF) on a label.*
Note: Finish(*):T .....Tin-plated
GW ...Gold-plated

Header Side entry type (Center locking type)

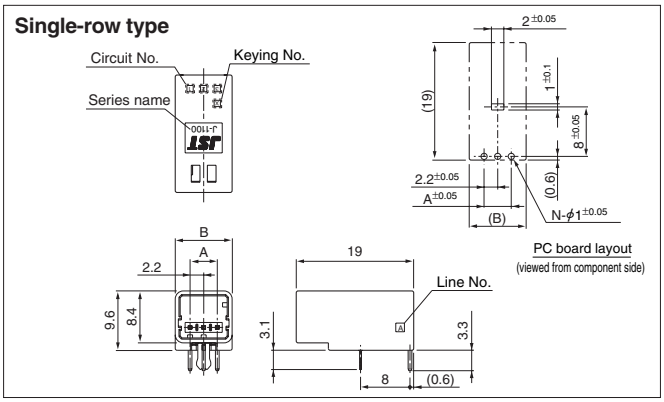

Circuits	Keying	Model No.	Dimensions (mm)		Q'ty / box
			A	B	
3	X	**S03B-J11SK-(*)XR**	4.4	9.2	600
	Y	**S03B-J11SK-(*)YR**	4.4	9.2	600

Material and Finish
Post: Copper alloy, tin-plated, gold-plated Housing: Glass-filled PBT, UL94V-0, black Reinforcing metal fixture: Copper alloy, tin-plated

RoHS compliance *Gold-plated product displays (LF) on a label.*
Note: Finish(*):T .....Tin-plated
GW ...Gold-plated

Receptacle housing

Double-row type

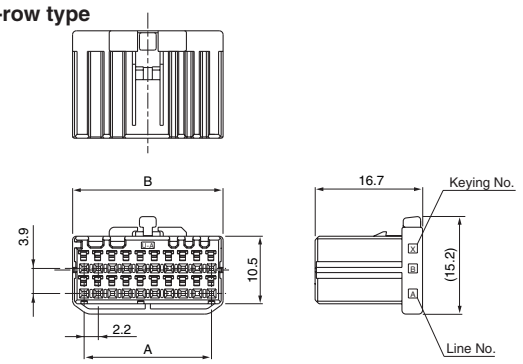

Circuits	Keying	Model No.	Dimensions (mm)		Q'ty / box
			A	B	
6	X	**J11DF-06V-KX**	4.4	8.0	800
	Y	**J11DF-06V-KY**	4.4	8.0	800
8	X	**J11DF-08V-KX**	6.6	10.2	500
	Y	**J11DF-08V-KY**	6.6	10.2	500
12	X	**J11DF-12V-KX**	11.0	14.6	400
	Y	**J11DF-12V-KY**	11.0	14.6	400
20	X	**J11DF-20V-KX**	19.8	23.4	250
	Y	**J11DF-20V-KY**	19.8	23.4	250
22	X	**J11DF-22V-KX**	22.0	25.6	—
	Y	**J11DF-22V-KY**	22.0	25.6	—
26	X	**J11DF-26V-KX**	26.4	30.0	—
	Y	**J11DF-26V-KY**	26.4	30.0	—
30	X	**J11DF-30V-KX**	30.8	34.4	—
	Y	**J11DF-30V-KY**	30.8	34.4	—

Material
Glass-filled PBT, UL94V-0, black

RoHS compliance

Tab housing

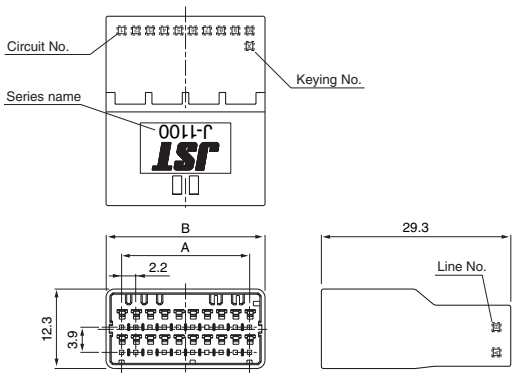

Circuits	Keying	Model No.	Dimensions (mm)		Q'ty / box
			A	B	
6	X	**J11DFM-06V-KX**	4.4	9.2	400
8	X	**J11DFM-08V-KX**	6.6	11.4	300
12	X	**J11DFM-12V-KX**	11.0	15.8	200
20	X	**J11DFM-20V-KX**	19.8	24.6	150

Material
Glass-filled PBT, UL94V-0, black

RoHS compliance

Header Top entry type (Center locking type)

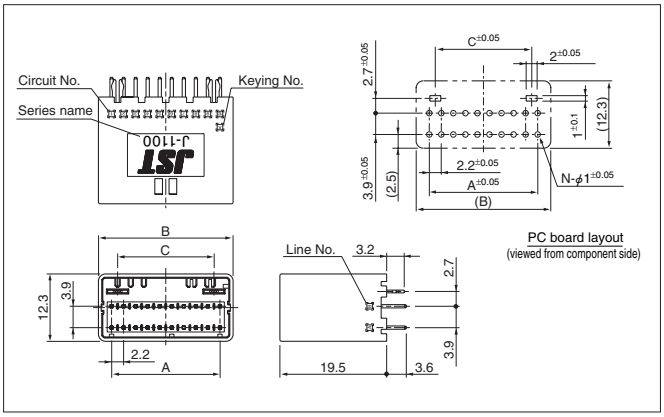

Circuits	Keying	Model No.	Dimensions (mm)			Q'ty / box
			A	B	C	
6	X	**B06B-J11DK-(*)XR**	4.4	9.2	—	500
	Y	**B06B-J11DK-(*)YR**	4.4	9.2	—	500
8	X	**B08B-J11DK-(*)XR**	6.6	11.4	4.4	400
	Y	**B08B-J11DK-(*)YR**	6.6	11.4	4.4	400
12	X	**B12B-J11DK-(*)XR**	11.0	15.8	8.8	280
	Y	**B12B-J11DK-(*)YR**	11.0	15.8	8.8	280
20	X	**B20B-J11DK-(*)XR**	19.8	24.6	17.6	180
	Y	**B20B-J11DK-(*)YR**	19.8	24.6	17.6	180
22	X	**B22B-J11DK-(*)XR**	22.0	26.8	19.8	—
	Y	**B22B-J11DK-(*)YR**	22.0	26.8	19.8	—
26	X	**B26B-J11DK-(*)XR**	26.4	31.2	24.2	—
	Y	**B26B-J11DK-(*)YR**	26.4	31.2	24.2	—
30	X	**B30B-J11DK-(*)XR**	30.8	35.6	28.6	—
	Y	**B30B-J11DK-(*)YR**	30.8	35.6	28.6	—

Material and Finish

Post: Copper alloy, tin-plated, gold-plated
Housing: Glass-filled PBT, UL94V-0, black
Reinforcing metal fixture: Copper alloy, tin-plated

RoHS compliance *Gold-plated product displays (LF) on a label.*
Note: Finish(*):T .....Tin-plated
GW ...Gold-plated

Header Side entry type (Center locking type)

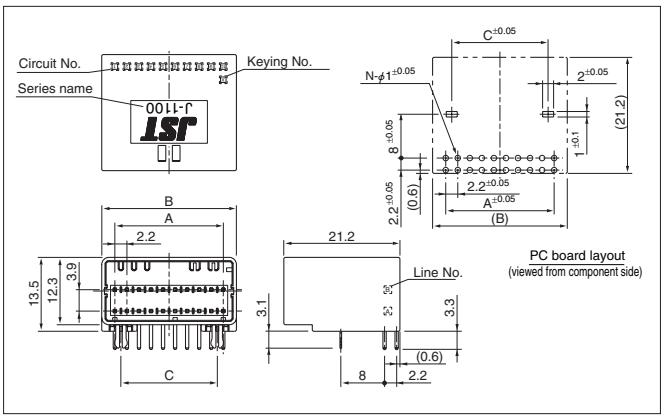

Circuits	Keying	Model No.	Dimensions (mm)			Q'ty / box
			A	B	C	
6	X	**S06B-J11DK-(*)XR**	4.4	9.2	—	375
	Y	**S06B-J11DK-(*)YR**	4.4	9.2	—	375
8	X	**S08B-J11DK-(*)XR**	6.6	11.4	—	300
	Y	**S08B-J11DK-(*)YR**	6.6	11.4	—	300
12	X	**S12B-J11DK-(*)XR**	11.0	15.8	8.8	225
	Y	**S12B-J11DK-(*)YR**	11.0	15.8	8.8	225
20	X	**S20B-J11DK-(*)XR**	19.8	24.6	17.6	135
	Y	**S20B-J11DK-(*)YR**	19.8	24.6	17.6	135

Material and Finish

Post: Copper alloy, tin-plated, gold-plated
Housing: Glass-filled PBT, UL94V-0, black
Reinforcing metal fixture: Copper alloy, tin-plated

RoHS compliance *Gold-plated product displays (LF) on a label.*
Note: Finish(*):T .....Tin-plated
GW ...Gold-plated

Model number identification

Receptacle contact

S F1 F - 21 T - P 0.6

- Form: S…Strip form
- Series name
- Kind of terminal: F…Receptacle contact
- Applicable wire: 002…AWG#28 ~ AWG#24
  21…AWG#22 ~ AWG#18
- Surface finish: T…Tin-plated, GC…Gold-plated
- Material: P…Copper alloy
- Terminal size

Tab contact

S F1 M - 21 T - M 0.6 A

- Form: S…Strip form
- Series name
- Kind of terminal: M…Tab contact
- Applicable wire: 002…AWG#28 ~ AWG#24
  21…AWG#22 ~ AWG#18
- Surface finish: T…Tin-plated, GC…Gold-plated
- Material: M…Copper alloy
- Terminal size
- Auxiliary mark

Receptacle housing

J11 DF - 06 V - K X

- Series name
- Type of connector: SF…Single-row type
  DF…Double-row type
- No. of circuits: 3, 6, 8, 12, 20
- Flammability: V…UL94V-0
- Color indication: K…Black
- Keying: X…X-Keying, Y…Y-Keying

Tab housing

J11 DFM - 06 V - K X

- Series name
- Type of connector: SFM…Single-row type
  DFM…Double-row type
- No. of circuits: 3, 6, 8, 12, 20
- Flammability: V…UL94V-0
- Color indication: K…Black
- Keying: X…X-Keying

Header

B 06 B - J11 D K - T X R

- PC board mounting direction:
  B…Top entry type, S…Side entry type
- No. of circuits: 3, 6, 8, 12, 20
- Product name: Header
- Series name
- Rows: S…Single-row, D…Double-row
- Color indication: K…Black
- Surface finish: T…Tin-plated, GW…Gold-plated
- Keying: X…X-Keying, Y…Y-Keying
- Packaging form: R…Tray, M…Magazine stick